ESCHER WYSS

Deflaker

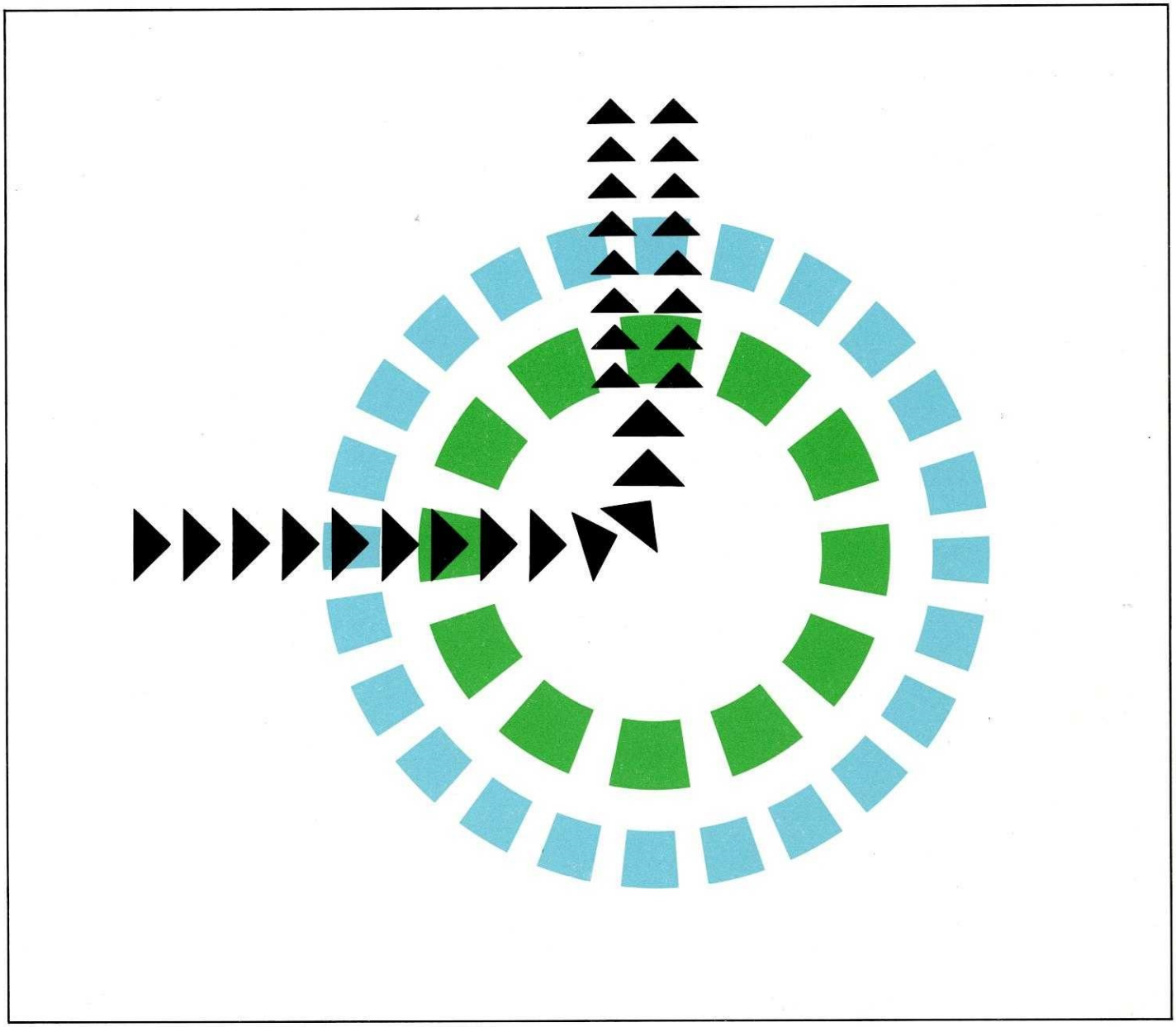

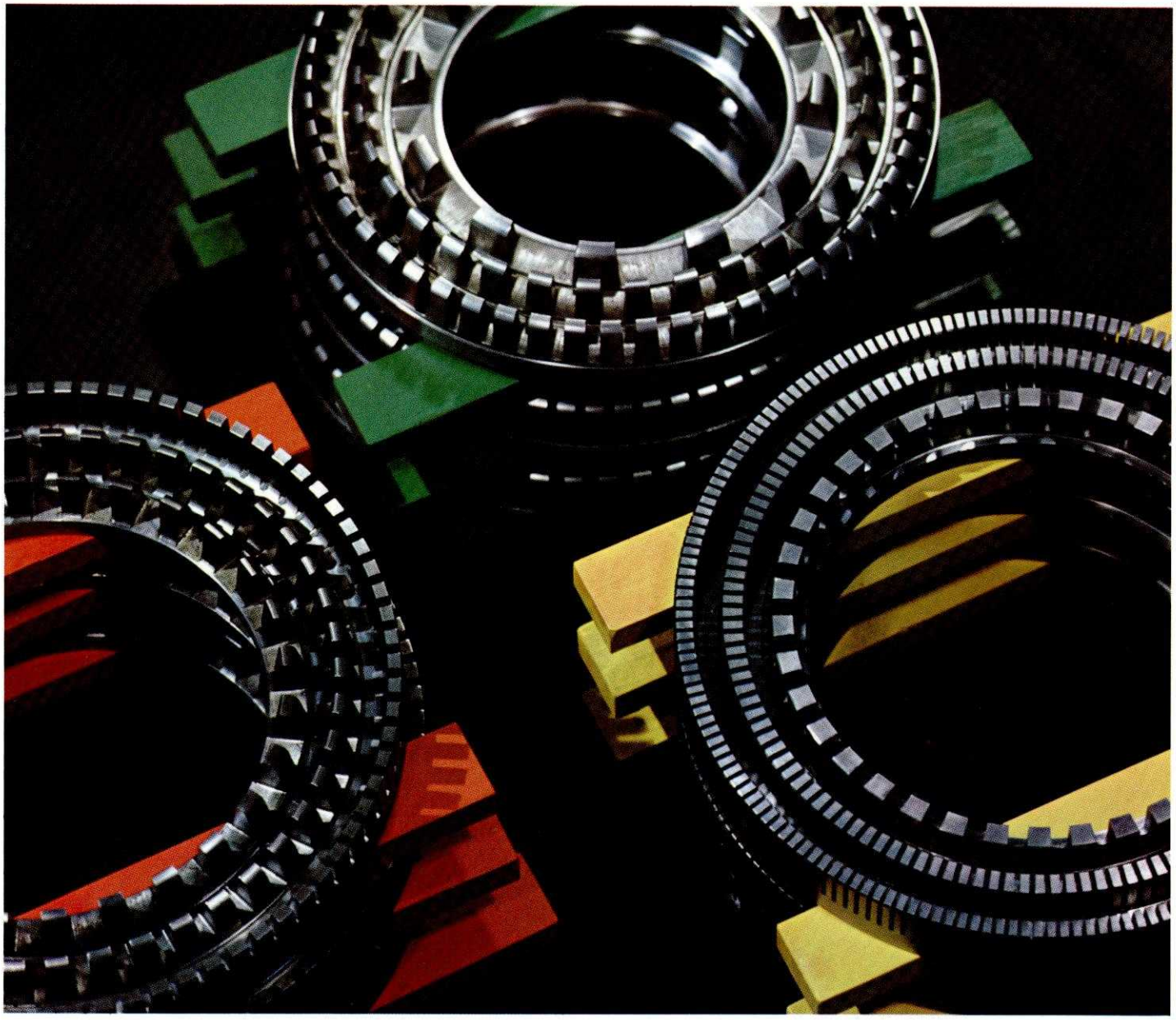

Deflaker

A modern stock preparation plant for the manufacture of paper consists of a sequence of treatment processes including size reduction and screening of the raw materials. The exact process depends on the type of stock and the characteristics of the paper to be produced. One of the requirements of stock preparation is that the stock should be flake-free, when it reaches the paper machine.

If the stock is produced from dry raw material, which could be either chemical pulp, waste paper or broke, the raw material is first broken down with water in a pulper, until a pumpable suspension is reached. In a modern plant, it is not economic to reduce the flake content in the pulper beyond this point. The flakes are reduced to individual fibres under optimum working conditions in the deflaker. This method of operation achieves considerable power saving.

The well-known principle of the "Stiftmühle" was the basis of design for the Escher Wyss deflaker, which has been developed for the special requirements of the deflaking process.

Over two thousand Escher Wyss deflakers have been supplied to the paper industry to date.
In operation, they have proved robust machines, with which any deflaking problem can be reliably and safely solved with the maximum efficiency.

Advantages of the Escher Wyss Deflaker:

- Complete deflaking
- Simple to operate
- Suitable for a wide range of applications
- No reduction in freeness
- Power saving

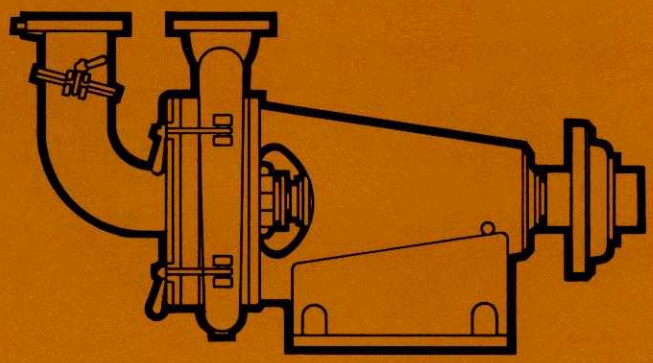

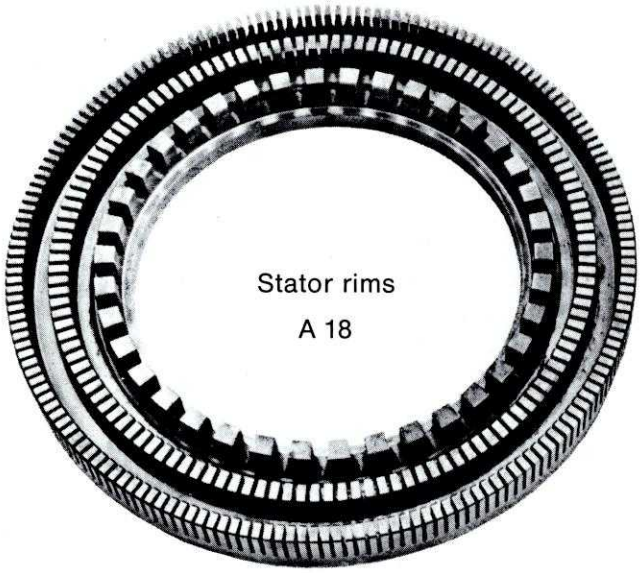
Stator rims
A 18

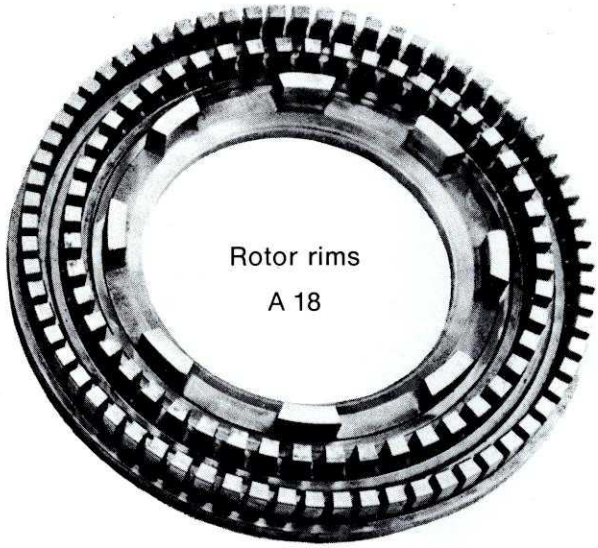
Rotor rims
A 18

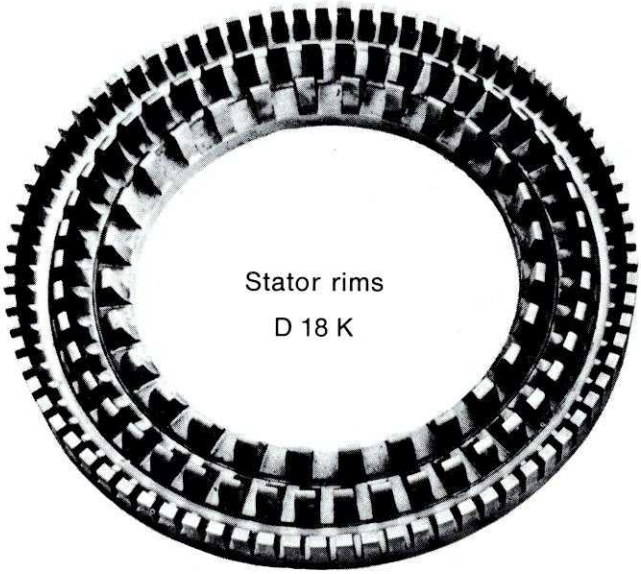
Stator rims
D 18 K


Rotor rims
D 18 K

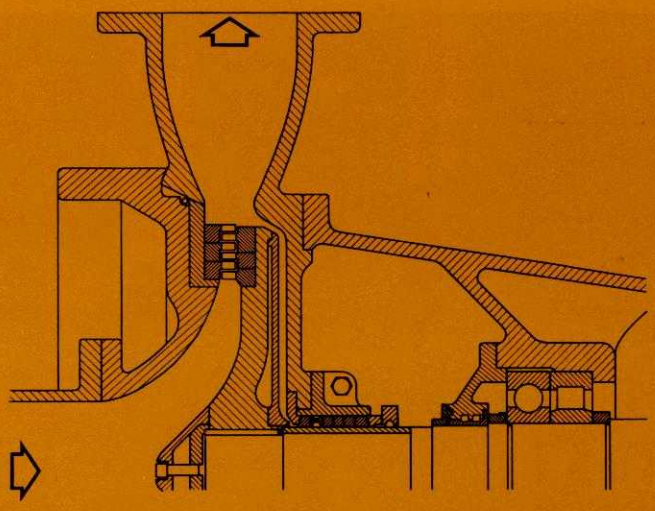

Operating Principle

The very good effect of the Escher Wyss deflaker is due to the path which the stock must follow through the machine. The suspension, which enters the deflaker centrally, is split into streams by the slits in the rotor and stator rings, which mate with one another. The stock is therefore accelerated and decelerated repeatedly, as it passes through the machine. The resulting mechanical impact forces loosen and release the bonds between individual fibres. Additionally, in the narrow gap between rotor and stator, hydrodynamic shear forces are produced by the severe velocity gradients, which also play an essential part in the deflaking process. The optimum gap width between rotor and stator was determined so that the required frictional and shear forces were produced in the gap but without risk of fibre shortening. The Escher Wyss deflaker does not reduce the stock freeness, which would adversely affect drainage on the paper machine.

Design Features

The Escher Wyss deflaker is produced in three sizes: E 0, E 1 K and E 2 K.

The rotor shaft of the E 1 K and E 2 K deflaker is supported in roller bearings, running in an oil bath. The roller bearings of the E 0 deflaker are grease-lubricated. The shaft is protected by a ceramic-covered shaft sleeve in the area of the shaft seal. Both, the type E 1 K and E 2 K deflakers have a hinged front cover, which is attached to the rotor housing. In the vertical section of the inlet bend which is bolted to the front cover, the pipe is split at an angle so that it can be easily separated from the upper part of the inlet pipe. This arrangement allows quick and easy access to the rotor and stator fillings, without having to disconnect the inlet flange or the wash-out water pipe. There are only four eye bolts to be loosened and swung clear.

Both, the type E 1 K and E 2 K deflakers have a direct coupled drive, using a flexible Periflex flange coupling. The E 0 deflaker is belt-driven.

As an alternative to the standard design, all parts in contact with the stock can be supplied in chromium steel for working in acid conditions.

Any deflaking problem can be overcome with the Escher Wyss deflaker by selecting the appropriate filling from the wide range available. Individual rims are made with different numbers and widths of slits ensuring complete fibre protection while maintaining economic conditions for efficient operation.

The three sizes of Escher Wyss deflaker

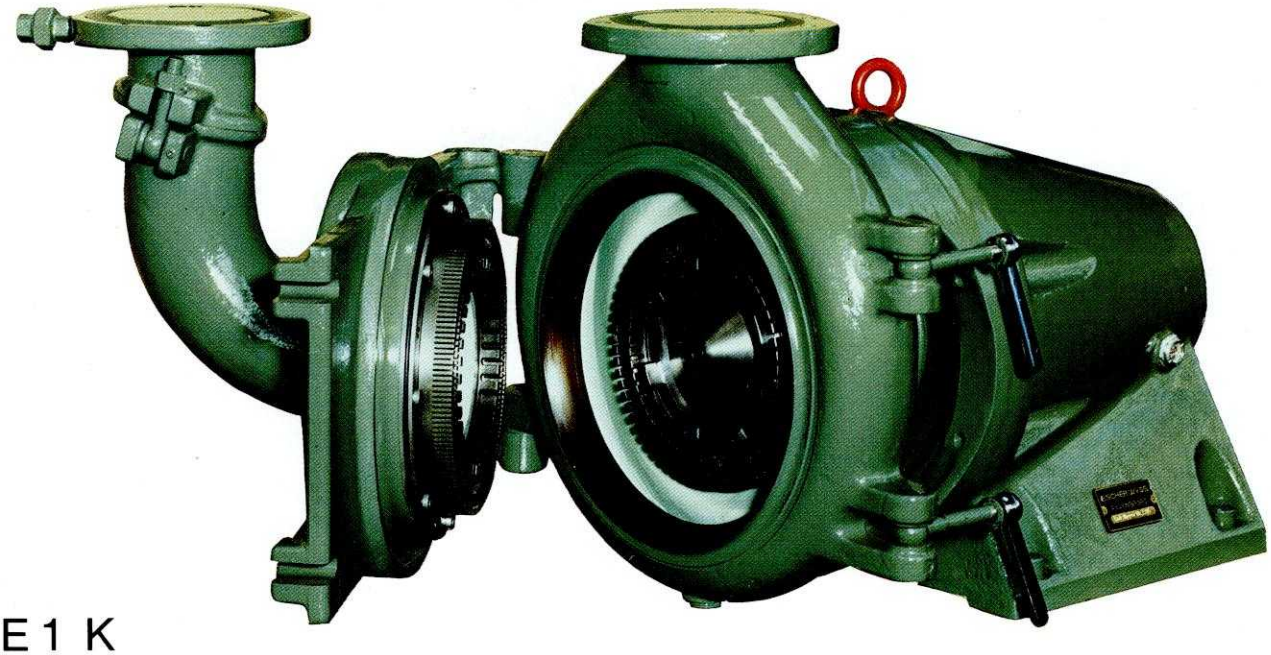

E 1 K

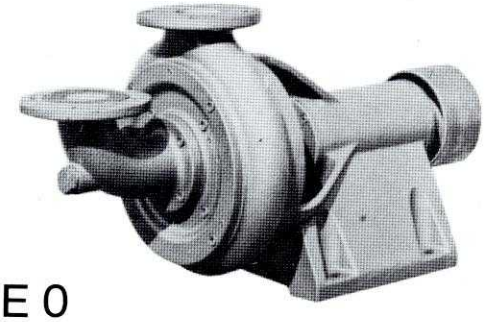

E 0

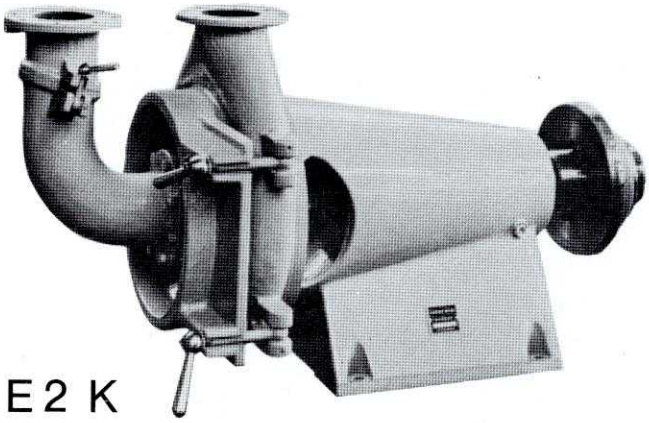

E 2 K

E 2 K deflakers installed in a fine paper mill

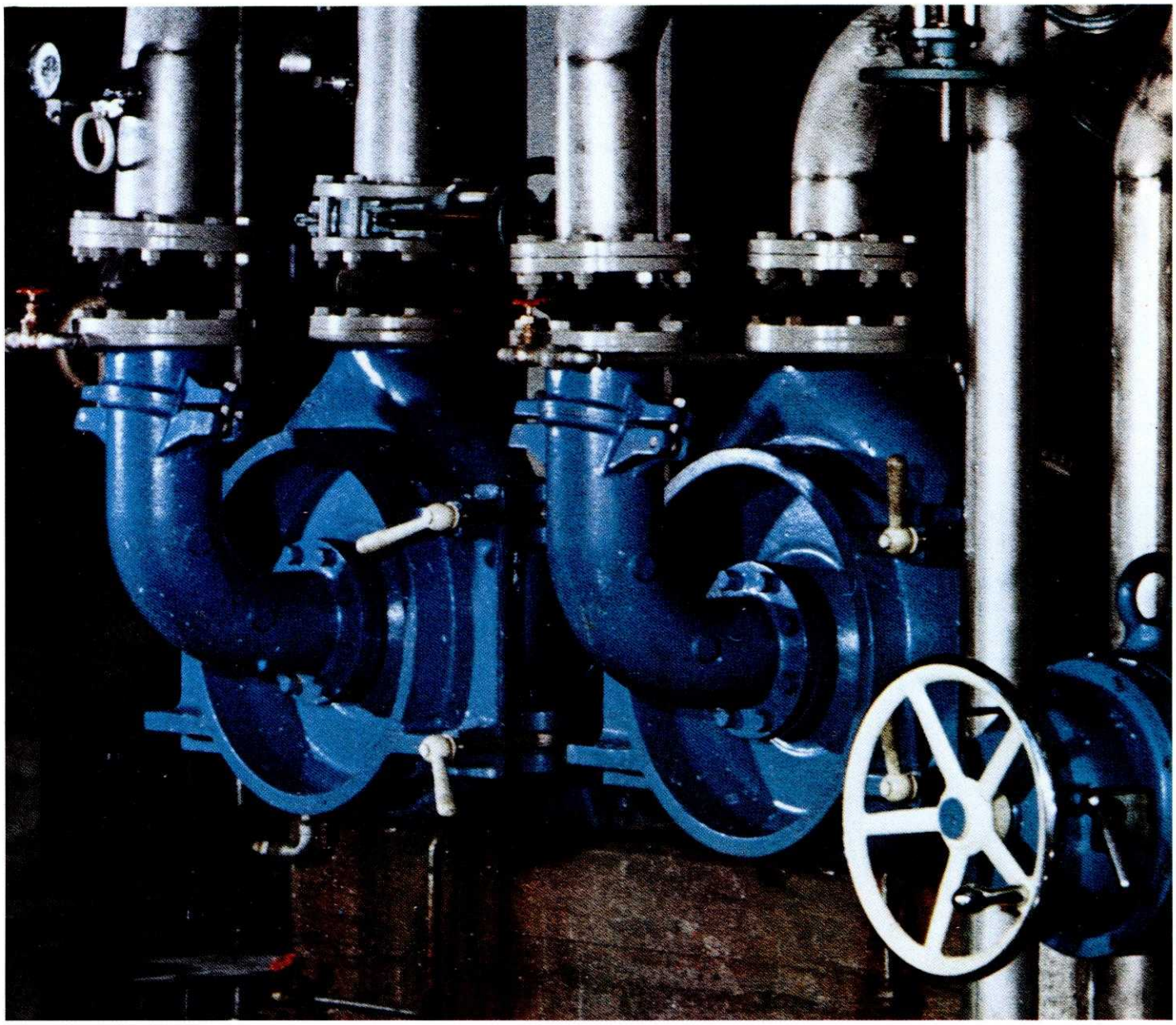

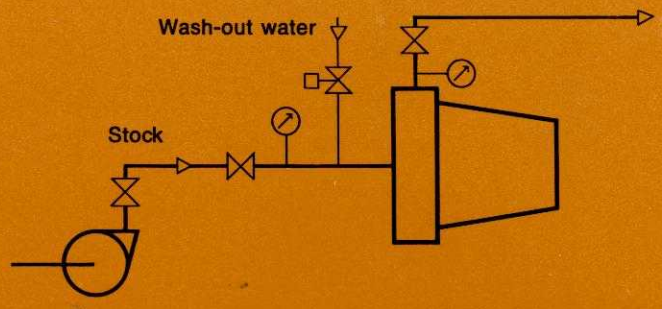

Guide Lines

for choosing the type of deflaker filling.

Type	Pow. sup. Fr.	①	②	③	④	⑤
E 0	50/60 Hz		J 12	K 12 K	L 12 K	X 12 K
E 1 K	50 Hz	AS 18	A 18	B 18 K	C 18 K	D 18 K
E 1 K	60 Hz		E 18	F 18 K	G 18 K	H 18 K
E 2 K	50 Hz	MS 18	M 18	N 18 K	O 18 K	U 18 K
E 2 K	60 Hz		P 18	R 18 K	S 18 K	T 18 K

① Fillings for fine-deflaking of stock having very good flow characteristics.

② These fillings are used for fine-deflaking of stock having good flow characteristics, i. e. spruce sulphite and short-fibred pulp, groundwood, pulp from annual plants, machine broke and sorted waste paper.

③ These five somewhat coarser fillings are used for deflaking of long-fibred pulp and waste paper.

④ Coarse fillings for deflaking of long-fibred sulphate pulp and difficult-to-deflake waste paper. They are used for high through-put rates and reduced treatment.

⑤ Fillings for pre-deflaking of waste paper prior to screening and for handling waste paper which has had little treatment in the pulper.

Installation

The Escher Wyss deflaker is installed directly in the main stock line. For preference, the deflaker should be fed by a pump. It is advisable to install a cleaner before the deflaker to protect the fillings. Before the deflaker is shut down, the inlet valve should be closed and the stock in the machine washed out by opening the wash-out water valve.

Applications

The Escher Wyss deflaker has many applications in the pulp and paper industry:

- Deflaking of fibre stock
- Separation of fibres from contraries, especially in waste paper preparation
- Deflaking of broke
- Treatment of groundwood rejects
- Treatment of rejects from screens in waste paper preparation (special fillings)
- Defibring of pulp from annual plants, after disintegration
- Preparation of coating colours

In addition, the Escher Wyss deflaker can be used successfully in other branches of the industry, for example in the manufacture of viscous fibre, or generally in the chemical industry of dispersion, homogenisation, mixing and preparing emulsions.

Principle dimensions of the E 0 deflaker

A = 410 mm
B = 825 mm
C = 200 mm
D_1 = 65 mm
D_2 = 65 mm

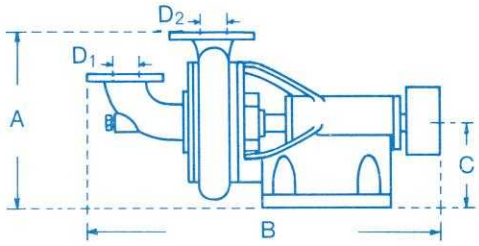

E 0

Principle dimensions of the E 1 K deflaker

A = 570 mm
B = 1200 mm
C = 250 mm
D_1 = 100 mm
D_2 = 125 mm

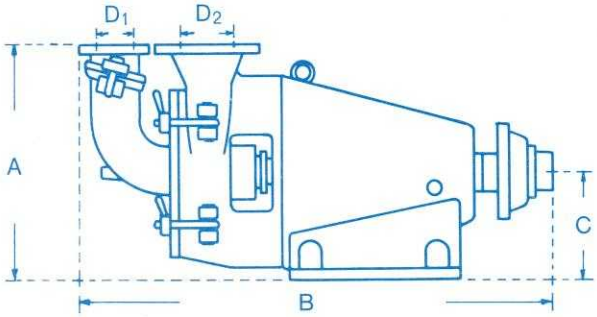

E 1 K

Principle dimensions of the E 2 K deflaker

A = 875 mm
B = 1800 mm
C = 400 mm
D_1 = 150 mm
D_2 = 150 mm

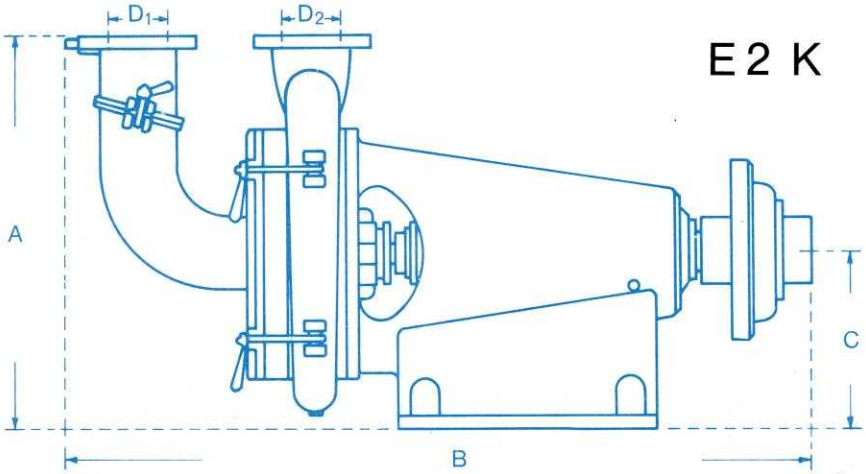

E 2 K

Sizes supplied		E 0	E 1 K	E 2 K
Max. production*)	t/24 h	20	50 (65)	100 (120)
Flow rate	l/min	50–250	250–1000	500–2000
Consistency	%	3–6	3–6	3–6
Installed motor power	kW	22	55 (75)	132 (160)
Speed at 50 Hz	rpm	3900	3000	1500
Speed at 60 Hz	rpm	3900	3600	1800
Max. outlet pressure	kPa	245	245	245
Drive		belt	direct	direct

*) depending upon type of stock, consistency and flow rate

Efficiency

At an average flow rate of 600 l/min and a consistency of 4.5 %, the specific power consumption of an E 1 K deflaker per pass is between 2.5 and 3.9 kWh/100 kg, depending upon the type of stock. For the E 2 K deflaker with its correspondingly higher flow rate, the specific energy consumption is in the same range.

It is well known that for a constant output, the energy required to produce a flake-free stock is largely determined by the time spent in the pulper. The shorter the slushing time in the pulper, the lower the total energy required for the combined pulping and deflaking. The slushing time in the pulper should therefore be kept as short as possible. Practical experience has shown that it is economic to stop pulping when a flake content of 40 % has been reached.

In the adjacent diagram an example is shown of a long-fibred sulphate stock, which has been slushed in a pulper only and also in a pulper combined with a deflaker. With the pulper only, it took over 40 kWh/100 kg to reduce the stock to a virtually flake-free condition. When slushing was stopped at a flake content of 40 % and the process was continued with two passes through a deflaker to bring the flake content to a comparable level of about 1.5 %, the specific energy consumption was in total barely 13 kWh/100 kg. One more pass through the deflaker would produce a practically flake-free stock.

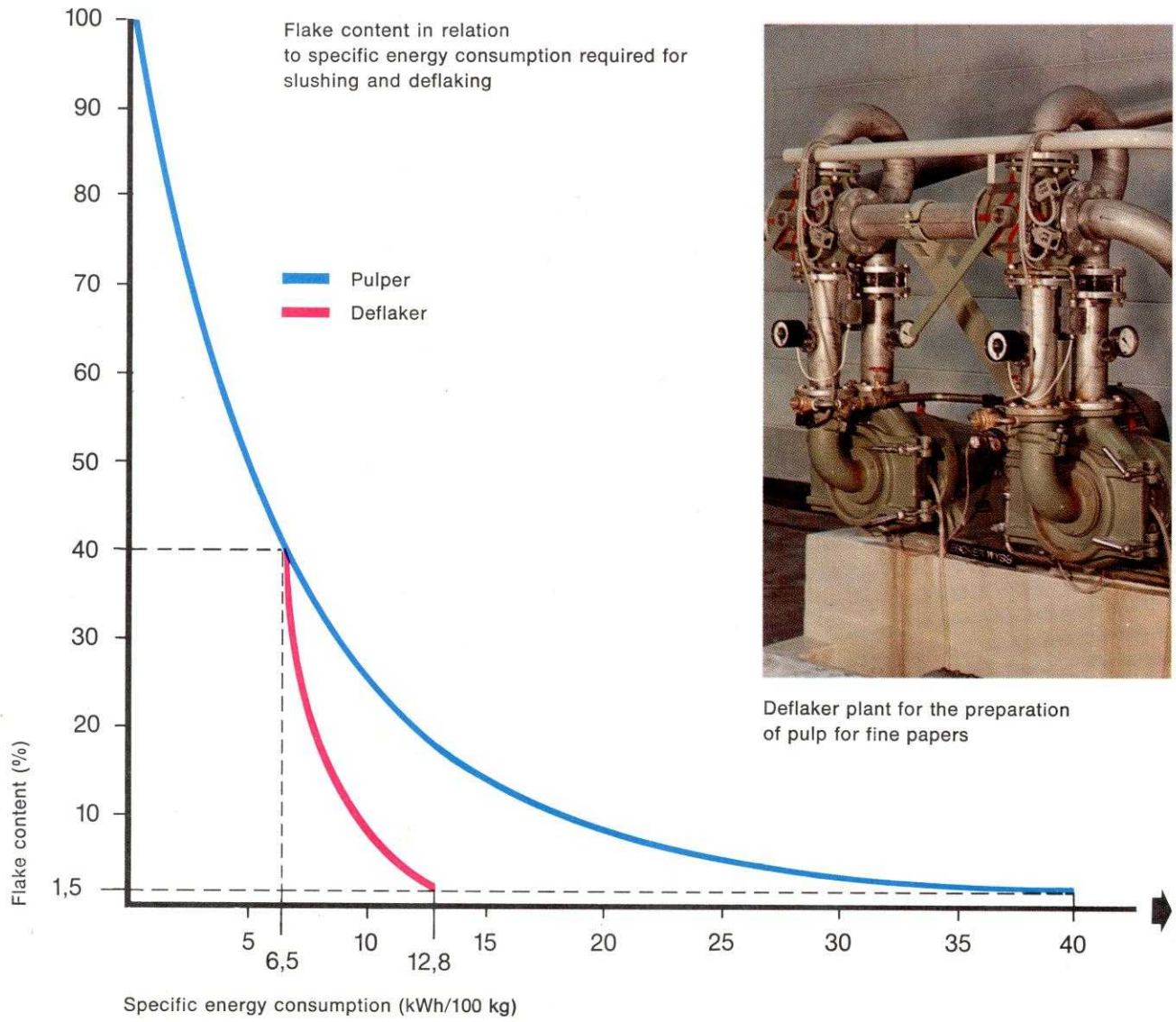

Deflaker plant for the preparation of pulp for fine papers